REGULATIONS AND RATES APPLICABLE TO THE FURNISHING OF

ACCESS SERVICE

PROVIDED BY

COMCAST PHONE OF OHIO, LLC

WITHIN THE STATE OF OHIO

RECEIVED
MAY 1 2003
TARIFF DIVISION
Public Utilities Commission of Ohio

TABLE OF CONTENTS

PAGE NO.

SECTION 1. APPLICATION OF TARIFF

1.1. GENERAL 1

1.2. TARIFF REVISION SYMBOLS 1

1.3. DEFINITIONS 2

1.4. EXPLANATION OF ABBREVIATIONS 6

TABLE OF CONTENTS

PAGE NO.

SECTION 2. GENERAL REGULATIONS

2.1. UNDERTAKING OF THE COMPANY 1
- 2.1.1. Scope 1
- 2.1.2. Shortage of Facilities 1
- 2.1.3. Terms and Conditions 1
- 2.1.4. Provision of Equipment and Facilities 4
- 2.1.5. Liability of the Company 6
- 2.1.6. Discontinuance of Service for Cause 8

2.2. OBLIGATIONS OF THE CUSTOMER 9
- 2.2.1. Customer Premises Provisions 9
- 2.2.2. Liability of the Customer 9
- 2.2.3. Determination of Jurisdiction ..... 10 (T)
- 2.2.4. Changes in Service Requested 14
- 2.2.5. Notice to Company for Cancellation of Service 14
- 2.2.6. Claims 14
- 2.2.7. Transfers and Assignments 14

2.3. CUSTOMER EQUIPMENT AND CHANNELS 15
- 2.3.1. Interconnection of Facilities 15
- 2.3.2. Inspection and Testing 15

2.4. ORDERING, RATING AND BILLING OF ACCESS SERVICES WHERE MORE THAN ONE EXCHANGE COMPANY IS INVOLVED 16

2.5. ALLOWANCE FOR INTERRUPTIONS IN SERVICE 16
- 2.5.1. General 16
- 2.5.2. Notification of Service-Affecting Activities 16
- 2.5.3. Limitations on Allowances 17
- 2.5.4. Use of Another Means of Communications 18
- 2.5.5. Application of Credits for Interruptions in Service 18

2.6. PRIVACY RULES 19

2.7. APPLICATION OF RATES AND CHARGES 20
- 2.7.1. Measuring Access Minutes 20
- 2.7.2. Rates Based Upon Distance 21
- 2.7.3. Nonrecurring Charges 22

TABLE OF CONTENTS

PAGE NO.

SECTION 2. GENERAL REGULATIONS (CONT'D)

2.8. ACCESS SERVICE ORDER 23
2.8.1. Ordering Requirements 23

(D)
(D)

2.9. BILLING AND PAYMENT 31
2.9.1. Taxes 31
2.9.2. Claims and Disputes 32
2.9.3. Payment of Deposits 33
2.9.4. Advance Payments ..... 34 (T)

2.10. SPECIAL CONSTRUCTION 34

2.11. NON-ROUTINE INSTALLATION 34

TABLE OF CONTENTS

PAGE NO.

SECTION 3. SWITCHED ACCESS SERVICE

3.1.	GENERAL	1	
3.2.	TRAFFIC TYPE DESIGNATION	1	(T) (D) | (D)
3.3.	SWITCHED ACCESS RATE CATEGORIES	2	
3.3.1.	Carrier Common Line	3	
3.3.2.	Tandem Transport	4	(T)
3.3.3.	Network Access	6	(T)
3.3.4.	8XX Toll Free Access Service	7	
3.4.	SWITCHED ACCESS RATES AND CHARGES	8	
3.4.1.	Service Implementation	8	
3.4.2.	Carrier Common Line	8	
3.4.3.	Tandem Transport	8	(T)
3.4.4.	Network Access	10	(T)
3.4.5.	8XX Toll-Free Access	10	

TABLE OF CONTENTS

PAGE NO.

SECTION 4. SPECIAL ACCESS SERVICE (T)

4.1. GENERAL ..... 1 (N)

TABLE OF CONTENTS

PAGE NO.

SECTION 5. MISCELLANEOUS SERVICES

5.1. PRESUBSCRIPTION 1

5.2. SERVICE CHANGE DISPUTE ..... 2 (T)

5.3. SPECIAL ASSEMBLIES AND INDIVIDUAL CASE BASIS ARRANGEMENTS 2

5.4. RATES AND CHARGES 3

1. APPLICATION OF TARIFF

1.1. GENERAL

This Tariff applies to intrastate Access Service provided by the Company to Customers. (T) (T)

The provision of such services by the Company as set forth in this Tariff does not constitute a joint undertaking with the Customer for the furnishing of any service. (N) (N)

The provision of Access Service is subject to existing regulations and terms and conditions specified in this Tariff as well as in the Company's other current Tariffs, and may be revised, added to, or supplemented by superseding issues.

In addition to the regulations and charges herein, this Tariff is subject to specific regulations as may be prescribed by the Public Utilities Commission of Ohio.

1.2. TARIFF REVISION SYMBOLS

Revisions to this Tariff are coded through the use of symbols. These symbols appear in the right hand margin of the page. The symbols and their meanings are as follows:

(C) – Change in regulation

(D) – Discontinued rate, regulation or text

(I) – Increase in rate

(N) – New rate, regulation or text

(R) – Reduction in rate

(T) – Change in text

1. APPLICATION OF TARIFF

1.3. DEFINITIONS

(D)
(D)

Access Minutes

The usage of exchange facilities in intrastate service for the purpose of calculating chargeable usage.

Access Tandem

A switching system that provides a traffic concentration and distribution function for originating or terminating traffic between end offices and a Customer's premises. (T)

Advance Payment (N)

The term "Advance Payment" denotes the requirement for partial or full payment required before the start of service. (N)

(D)
(D)

Call

A Customer attempt for which the complete address code is provided to the service end office. (T)

Carrier or Common Carrier

Any individual, partnership, association, corporation or other entity engaged in intrastate communication for hire by wire or radio between two or more exchanges.

Central Office

A local Company switching system where exchange service customer station loops are terminated for purposes of interconnection to each other and to trunks.

1. APPLICATION OF TARIFF

1.3. DEFINITIONS (CONT'D)

Channel

A communications path between two or more points of termination.

Commission

The Public Utilities Commission of Ohio.

Common Carrier

Any individual, partnership, association, joint-stock company, trust, governmental entity or corporation engaged for hire in intrastate communication by wire or radio, between two or more exchanges.

(D)
(D)

Company

Comcast Phone of Ohio, LLC.

Customer

The term "Customer" (when capitalized) denotes any person, firm, partnership, corporation or other entity that uses service under the terms and conditions of this Tariff and is responsible for the payment of charges. (T) (T)

Customer Premises

The customer premises is all space in the same building occupied by a customer and all space occupied by the same customer in different buildings on contiguous property.

End Office (C)

With respect to each 101-XXXX code prefix assigned to the Company, the location of the Company's "end office" for purposes of this Tariff shall be the point of interconnection associated with that 101-XXXX code in the Local Exchange Routing Guide, issued by Telcordia. Services provided at a Trunk Gateway location (as defined elsewhere) are the functional equivalent of services provided at an End Office location. (C)

1. APPLICATION OF TARIFF

1.3. DEFINITIONS (CONT'D)

End User

The term "End User" means any wholesale or retail customer that is not a carrier. (C)

Exchange

A group of lines in a unit generally smaller than a LATA established by the Company for the administration of communications service in a specified area. An Exchange may consist of one or more central offices together with the associated facilities used in furnishing communications service within that area.

Facilities

Denotes any cable, poles, conduit, carrier equipment, wire center distribution frames, central office switching equipment, etc., utilized to provide the service offered under this Tariff.

Local Access and Transport Area (LATA)

A geographic area established for the provision and administration of communications service. It encompasses one or more designated exchanges, which are grouped to serve common social, economic and other purposes.

Local Calling Area

A geographical area, as defined in the Company's local or general exchange service Tariff in which an End User may complete a call without incurring toll usage charges.

Message

A Message is a Call as defined above.

1. APPLICATION OF TARIFF

1.3. DEFINITIONS (CONT'D)

Point of Termination

The point of termination within a customer-designated premises at which the Company's responsibility for the provision of access service ends. The point of termination is the point of interconnection between Company communications facilities and customer-provided facilities as defined in Part 68 of the FCC's Rules and Regulations. (T) (T) (T)

Presubscription

An arrangement whereby an End User may select and designate to the Company an Interexchange Carrier (IXC) it wishes to access, without an Access Code, for completing long distance calls. The selected IXC is referred as the End User's Primary Interexchange Carrier (PIC).

"Public Service Commission" or "Commission"

See "Commission".

(D)

Signaling System 7 (SS7) (N)

The common channel out of Band Signaling protocol developed by the Consultative Committee for International Telephone and Telegraph (CCITT) and the American National Standards Institute (ANSI).

Tandem Transport

The term "Tandem Transport" denotes the transport between a third-party access tandem and the Company's Trunk Gateway Location or other point of interconnection. (N)

Trunk
A communications path connecting two switching systems in a network, used in the establishment of an end-to-end connection.

Trunk Gateway (N)
The point of interface between the PSTN trunk facility and the Company defined by Common Language Location Identifier (CLLI) codes assigned to the Company, as reflected in the Local Exchange Routing Guide (LERG). The trunk facility is owned or leased by the Company. Switching and signaling services provided at a Trunk Gateway location are the functional equivalent of services provided at an End Office location. (N)

(D)

1. APPLICATION OF TARIFF

1.3. DEFINITIONS (CONT'D)

VoIP (N)

VoIP-PSTN traffic is defined as traffic exchanged between a Company End User and the Customer in time division multiplexing ('TDM") format that originates and/or terminates in Internet Protocol ("IP") format. (N)

1. APPLICATION OF TARIFF

1.4. EXPLANATION OF ABBREVIATIONS

ANI - Automatic Number Identification (D)

(D)

CLLI - Common Language Location Identifier (N)
(D)

(D)

FCC - Federal Communications Commission (D)

(D)

ICB - Individual Case Basis

LATA - Local Access and Transport Area
LERG - Local Exchange Routing Guide (N)
(D)

MOU - Minutes of Use

NECA - National Exchange Carrier Association
NPA - Numbering Plan Area

PIC - Primary Interexchange Carrier
PIU - Percentage of Interstate Usage
PSTN - Public Switched Telephone Network (N)

VoIP - Voice over Internet Protocol (N)

2. GENERAL REGULATIONS

(D)

2.1. UNDERTAKING OF THE COMPANY

2.1.1. SCOPE

The Company undertakes to furnish Access Service in accordance with the terms and conditions set forth in this Tariff.

2.1.2. SHORTAGE OF FACILITIES

All service is subject to the availability of suitable facilities. The Company reserves the right to limit the length of communications or to discontinue furnishing services when necessary because of the lack of transmission medium capacity or because of any causes beyond its control.

The furnishing of service under this Tariff is subject to the availability on a continuing basis of all the necessary facilities and is limited to the capacity of the Company's facilities as well as facilities the Company may obtain from other carriers to furnish service from time to time as required at the sole discretion of the Company.

2.1.3. TERMS AND CONDITIONS

A. The minimum period for which service is provided and for which rates and charges set forth in Section 3.4 are applicable is one month unless otherwise specified. When a service is discontinued prior to the expiration of the minimum period, charges are applicable, whether the service is used or not. (C) (C)

B. Customers may be required to enter into written service orders which shall contain or reference a specific description of the service ordered, the rates to be charged, the duration of the services, and the terms and conditions in this Tariff. Customers will also be required to execute any other documents as may be reasonably requested by the Company. Orders for Switched Access are deemed made by the Customer, and initiation of the respective obligations of the parties as set forth in this Tariff takes place, upon the routing of calls by the Customer to and from the Company. (N) (N)

Text on this page has been moved to Section 2, Sheet 2.

2. GENERAL REGULATIONS

2.1. UNDERTAKING OF THE COMPANY (CONT'D)

2.1.3. TERMS AND CONDITIONS (CONT'D)

C. In any action between the parties to enforce any provision of this Tariff, the prevailing party shall be entitled to recover its legal fees and court costs from the non-prevailing party in addition to other relief a court may award.

D. The Company shall comply with all rules and regulations issued by the Commission. In addition, the regulations set forth herein apply to all services offered throughout this Tariff unless otherwise specified in the service specific section of this Tariff.

E. [Reserved for Future Use] (T)

(D)
|
(D)

F. Use of Service

The services the Company offers shall not be used for any unlawful purpose or for any use for which the Customer has not obtained all required governmental approvals, authorization, licenses, consents and permits. (T)

The Company may require applicants for service who intend to use the Company's offering for resale and/or for shared use to file a letter with the Company confirming that their use of the Company's offerings complies with relevant laws and regulations, policies, orders and decisions.

The Company may require a Customer to immediately shut down its transmission if such transmission is causing interference to others. (T)

(D)
|
(D)

Recording of telephone conversations of service provided by the Company is prohibited except as authorized by applicable federal, state and local laws.

G. Ownership of Facilities

The Customer obtains no property right or interest in the use of any specific type of facility, service, equipment, number, process, or code. All right, title and interest to such items remain, at all times, solely with the Company. (T)

Text on this page has been moved from Section 2, Sheet 1.

2. GENERAL REGULATIONS

2.1. UNDERTAKING OF THE COMPANY (CONT'D)

2.1.3. TERMS AND CONDITIONS (CONT'D)

H. Interconnection

The Company will provide for interconnection with other carriers in accordance with the rules and regulations promulgated by the Commission.

I. Service may be terminated upon written notice to the Customer if: (T)

1. The Customer is using the service in violation of this Tariff; or (T)

2. The Customer is using the service in violation of the law. (T)

J. This Tariff shall be interpreted and governed by the laws of the state of Ohio without regard for its choice of laws provision.

2. GENERAL REGULATIONS

2.1. UNDERTAKING OF THE COMPANY (CONT'D)

2.1.4. PROVISION OF EQUIPMENT AND FACILITIES

A. The Company shall use reasonable efforts to make available services to a Customer on or before a particular date, subject to the provisions of and compliance by the Customer with the regulations contained in this Tariff. The Company does not guarantee availability by any such date and shall not be liable for any delays in commencing service to any customer. (T) (T)

B. The Company shall use reasonable efforts to maintain facilities and equipment that it furnishes to the Customer. The Customer may not, nor may the Customer permit others to, rearrange, disconnect, remove, attempt to repair, or otherwise interfere with any of the facilities or equipment installed by the Company, except upon the written consent of the Company. (T)

C. The Company may substitute, change or rearrange any equipment or facility at any time and from time to time, but shall not thereby alter the technical parameters of the service provided the Customer, without the prior consent of the Customer, which shall not be unreasonably withheld. (T)

D. Equipment the Company provides or installs at the customer premises for use in connection with the services the Company offers shall not be used for any purpose other than that for which the Company provided it.

E. The Customer shall be responsible for the payment of service charges as set forth herein for visits by the Company's agents or employees to the premises of the Customer when the service difficulty or trouble report results from the use of equipment or facilities provided by any party other than the Company, including but not limited to the Customer. (T) (T) (T)

2. GENERAL REGULATIONS

2.1. UNDERTAKING OF THE COMPANY (CONT'D)

2.1.4. PROVISION OF EQUIPMENT AND FACILITIES (CONT'D)

F. The Company shall not be responsible for the installation, operation, or maintenance of any customer provided communications equipment. Where such equipment is connected to the facilities furnished pursuant to this Tariff, the responsibility of the Company shall be limited to the furnishing of facilities offered under this Tariff and to the maintenance and operation of such facilities. Subject to this responsibility, the Company shall not be responsible for:

1. The transmission of signals by customer-provided equipment or for the quality of, or defects in, such transmission; or (T)

2. The reception of signals by customer-provided equipment.

G. Service is offered subject to the availability of facilities and provision of this Tariff. The Company's obligation to furnish facilities and service is dependent upon its ability to secure and retain, without unreasonable expense, suitable facilities from the underlying carrier, if an underlying carrier is involved.

H. The Company shall not be required to furnish, or continue to furnish, facilities or service where the circumstances are such that the proposed use of the facilities or service would tend to adversely affect the Company's property, service or economic conditions.

I. Service furnished by the Company may be physically or logically connected with services or facilities and with private systems, subject to technical limitations established by the Company. Service furnished by the Company may make use of the services, facilities or equipment owned, or controlled either directly or via contractual or other arrangements, by the Company and at the responsibility of the Company. (N) (N)

2. GENERAL REGULATIONS

2.1. UNDERTAKING OF THE COMPANY (CONT'D)

2.1.5. LIABILITY OF THE COMPANY

A. The liability of the Company for damages arising out of the furnishing of its Services, including but not limited to mistakes, omissions, interruptions, delays, or errors, or other defects, representations, or use of these services or arising out of the failure to furnish the service, whether caused by acts or omission, shall be limited to the extension of allowances for interruption as set forth in Section 2.5. The extension of such allowances for interruption shall be the sole remedy of the Customer and the sole liability of the Company. The Company will not be liable (T)
for any direct, indirect, incidental, special, consequential, exemplary or punitive
damages to the Customer as a result of any Company service, equipment or (T)
facilities, or the acts or omissions or negligence of the Company's employees or agents.

B. The Company shall not be liable for any delay or failure of performance or equipment due to causes beyond its control, including but not limited to: acts of God, fire, flood, explosion or other catastrophes; any law, order, regulation, direction, action, or request of the United States Government, or of any other local governments having or claiming jurisdiction over the Company, or of any department, agency, commission, bureau, corporation, or other instrumentality of any one or more of these federal, state, or local governments, or of any civil or military authority; national emergencies; insurrections; riots; wars; unavailability of rights-of-way or materials; or strikes, lockouts, work stoppages, or other labor difficulties.

C. When the services or facilities of third-parties are used separately or in conjunction (C)
with the Company's facilities or equipment in establishing a physical or logical
connection to points not reached by the Company's facilities or equipment, the
Company shall not be liable for any act or omission of such third-parties or their
agents or employees. (C)

D. The Company shall not be liable for any damages or losses due to the fault or negligence of the Customer or due to the failure or malfunction of customer-provided equipment or facilities. (T)

2. GENERAL REGULATIONS

2.1. UNDERTAKING OF THE COMPANY (CONT'D)

2.1.5. LIABILITY OF THE COMPANY (CONT'D)

E. The Company does not guarantee nor make any warranty with respect to installations it provides for use in an explosive atmosphere. The Customer indemnifies and holds the Company harmless from any and all loss, claims, demands, suits, or other action, or any liability whatsoever, whether suffered, made, instituted, or asserted by any other party or person(s), and for any loss, damage, or destruction of any property, whether owned by the Customer or others, caused or claimed to have been caused directly or indirectly by the installation, operation, failure to operate, maintenance, removal presence, condition, location, or use of any installation so provided. The Company reserves the right to require each Customer to sign an agreement acknowledging acceptance of the provisions of this Section 2.1.5.E as a condition precedent to such installations. (T) (T) (T)

F. The Company is not liable for any defacement of or damage to customer premises resulting from the furnishing of services or equipment on such premises or the installation or removal thereof, unless such defacement or damage is caused by negligence or willful misconduct of the Company's agents or employees.

G. The Company shall be indemnified, defended, and held harmless by the Customer against any claim, loss or damage arising from the Customer's use of services involving claims for libel, slander, invasion of privacy, or infringement of copyright arising from the Customer's own communications. (T) (T) (T)

H. The entire liability for any claim, loss, damage or expense from any cause whatsoever shall in no event exceed sums actually paid to the Company by the Customer for the specific services giving rise to the claim. No action or proceeding against the Company shall be commenced more than one year after the service is rendered. (T)

I. The Company makes no warranties or representations, express or implied either in fact or by operation of law, statutory or otherwise, including warranties of merchantability or fitness for a particular use, except those expressly set forth herein. Approval of limitation of liability language by the PUCO does not constitute a determination by the Commission that the limitation of liability imposed by the Company should be upheld in a court of law. Approval by the Commission merely recognizes that since it is a court's responsibility to adjudicate negligence and consequent damage claims, it is also the court's responsibility to determine the validity of the exculpatory clause. (N) (N)

2. GENERAL REGULATIONS

2.1. UNDERTAKING OF THE COMPANY (CONT'D)

2.1.6. DISCONTINUANCE OF SERVICE FOR CAUSE

A. Upon nonpayment of any amounts owing to the Company, the Company may, by giving 24 hours prior written notice to the Customer, discontinue or suspend service without incurring any liability. (T)

B. Upon violation of any of the other material terms or conditions for furnishing service the Company may, by giving 24 hours prior notice in writing to the Customer, discontinue or suspend service without incurring any liability if such violation continues during that period. (T)

C. Upon condemnation of any material portion of the facilities used by the Company to provide service to a Customer or if a casualty renders all or any material portion (T) of such facilities inoperable beyond feasible repair, the Company, by notice to the Customer, may discontinue or suspend service without incurring any liability. (T)

D. Upon the Customer's insolvency, assignment for the benefit of creditors, filing for (T) bankruptcy or reorganization, or failing to discharge an involuntary petition within the time permitted by law, the Company may immediately discontinue or suspend service without incurring any liability.

E. Upon any governmental prohibition or required alteration of the services to be provided or any violation of an applicable law or regulation, the Company may immediately discontinue service without incurring any liability.

F. In the event of fraudulent use of the Company's network, the Company may without notice suspend or discontinue service. The Customer will be liable for all (T) related costs. The Customer will also be responsible for payment of any (T) reconnection charges.

G. Upon the Company's discontinuance of service to the Customer under 2.1.6.A. or (T) 2.1.6.B., the Company, in addition to all other remedies that may be available to the Company at law or in equity or under any other provision of this Tariff, may declare all future monthly and other charges which would have been payable by the Customer during the remainder of the term for which such services would have (T) otherwise been provided to the Customer to be immediately due and payable. (T)

2. GENERAL REGULATIONS

2.2. OBLIGATIONS OF THE CUSTOMER

2.2.1. CUSTOMER PREMISES PROVISIONS

A. The Customer shall provide the personnel, power and space required to operate all facilities and associated equipment installed on the premises of the Customer. (T) (T)

B. The Customer shall be responsible for providing Company personnel access to premises of the Customer at any reasonable hour for the purpose of testing the facilities or equipment of the Company. (T) (T)

2.2.2. LIABILITY OF THE CUSTOMER

A. The Customer will be liable for damages to the facilities of the Company and for all incidental and consequential damages caused by the negligent or intentional acts or omissions of the Customer, its officers, employees, agents, invitees, or contractors where such acts or omissions are not the direct result of the Company's negligence or intentional misconduct. (T) (T)

B. To the extent caused by any negligent or intentional act of the Customer as described in A., preceding, the Customer shall indemnify, defend and hold harmless the Company from and against all claims, actions, damages, liabilities, costs and expenses, including reasonable attorneys' fees, for (1) any loss, destruction or damage to property of any third party, (2) the death of or injury to persons, including, but not limited to, employees or invitees of either party, and (3) any liability incurred by the Company to any third party pursuant to this or any other price list or tariff of the Company, or otherwise, for any interruption of, interference to, or other defect in any service provided by the Company to such third party. (T) (T)

C. The Customer shall not assert any claim against any other customer or user of the Company's services for damages resulting in whole or in part from or arising in connection with the furnishing of service under this Tariff including but not limited to mistakes, omissions, interruptions, delays, errors or other defects or misrepresentations, whether or not such other customer or user contributed in any way to the occurrence of the damages, unless such damages were caused solely by the negligent or intentional act or omission of the other customer or user and not by any act or omission of the Company. Nothing in this Tariff is intended either to limit or to expand the Customer's right to assert any claims against third parties for damages of any nature other than those described in the preceding sentence. (T) (T)

2. GENERAL REGULATIONS

2.2. OBLIGATIONS OF THE CUSTOMER (CONT'D)

2.2.3. DETERMINATION OF JURISDICTION (T)

A. When ordering Switched Access Service, the Customer may be required to provide a projected PIU factor, which may be subject to audit by the Company. Where jurisdiction can be determined from the call detail, the Company will develop a projected PIU factor from the call detail which will be used to bill the Customer. (C)

B. The Company will use the jurisdictional report provided by the Customer, or, in the absence of such report, the Company projected PIU factor developed from the call detail, to bill all intrastate rates and/or nonrecurring charges until the Company receives a revised report from the Customer or updates the Company projected PIU factor developed from the call detail.

C. The Customer shall keep sufficient detail from which the PIU can be ascertained for at least 18 months and upon request of the Company make the records available for inspection. Such a request will be initiated by the Company no more than once per year at the Company's expense. The Customer shall supply the data within thirty (30) calendar days of the Company request.

D. The Company may, in its sole discretion:

- waive any and all of the jurisdictional reporting obligations imposed by this tariff on the Customer and/or the Company. (C)

(D)

E. Effective on the first of January, April, July and October of each year, the customer may update the jurisdictional reports that require a projected interstate percentage. The Customer shall forward to the Company, to be received no later than 20 calendar days after the first of each such month, a revised report showing the (T) interstate percentage of use for the past three months ending the last day of December, March, June and September, respectively, for each service arranged for interstate and intrastate use. Except as set forth in B., preceding, where jurisdiction can be determined from the recorded message detail, the revised report will serve as the basis for the next three months billing and will be effective on the bill date in the following month (i.e., February, May, August, and November) for that service. No prorating or back billing will be done based on the report. If the Customer does not supply the report, the Company will assume the percentage to (T) be the same as that provided in the last quarterly report. For those cases in which a quarterly report has never been received from the Customer, the Company will (T) assume the percentage to be the same as that provided in the order for service as set forth in A., preceding.

Text on this page has been moved from Section 2 Sheet 12.

2. GENERAL REGULATIONS

2.2. OBLIGATIONS OF THE CUSTOMER (CONT'D)

2.2.3. DETERMINATION OF JURISDICTION (CONT'D) (T)

(D)

(D)

2. GENERAL REGULATIONS

2.2. OBLIGATIONS OF THE CUSTOMER (CONT'D)

2.2.3. DETERMINATION OF JURISDICTION (CONT'D) (T)

(D)

(D)

Text on this page has been moved to Section 2 Sheet 10.

2. GENERAL REGULATIONS

2.2. OBLIGATIONS OF THE CUSTOMER (CONT'D)

2.2.3. DETERMINATION OF JURISDICTION (CONT'D) (T)

(D)

(D)

2. GENERAL REGULATIONS

2.2. OBLIGATIONS OF THE CUSTOMER (CONT'D)

2.2.4. CHANGES IN SERVICE REQUESTED

If the Customer makes or requests material changes in circuit engineering, equipment specifications, service parameters, premises locations, or otherwise materially modifies any provision of the application for service, the Customer's installation fees shall be adjusted accordingly. (T) (T) (C)

2.2.5. NOTICE TO COMPANY FOR CANCELLATION OF SERVICE

Customers desiring to terminate service shall provide the Company 30 days written notice of their desire to terminate service.

2.2.6. CLAIMS

With respect to any service or facility provided by the Company, the Customer shall indemnify, defend and hold harmless the Company from and against all claims, actions, damages, liabilities, costs and expenses, including reasonable attorney fees for: (T)

A. Any loss, destruction or damage to property of the Company or any third party, or the death or injury to persons, including, but not limited to, employees or invitees of either party, to the extent caused by or resulting from the negligent or intentional act or omission of the Customer, its employees, agents, representatives or invitees; or (T)

B. Any claim, loss, damage, expense or liability for infringement of any copyright, patent, trade secret, or any proprietary or intellectual property right of any third party, arising from any act or omission by the Customer, including, without limitation, use of Company services and facilities in a manner not contemplated by the agreement between the Customer and the Company. (T) (T)

2.2.7 TRANSFERS AND ASSIGNMENTS

The Customer may not assign or transfer the use of service without the express prior written consent of the Company. The Company will only permit a Customer to transfer its existing service to another entity if the existing Customer has paid all charges owed to the Company. Such transfer or assignment shall only apply where there is no interruption of the use or location of service. All rates, terms and conditions shall apply to all such permitted transferees or assignees. (C) (C)

2. GENERAL REGULATIONS

2.3. CUSTOMER EQUIPMENT AND CHANNELS

2.3.1. INTERCONNECTION OF FACILITIES

In order to protect the Company's facilities and personnel and the services furnished to other customers by the Company from potentially harmful effects, the signals applied to the Company's service shall be such as not to cause damage to the facilities of the Company. Any special interface equipment necessary to achieve the compatibility between facilities of the Company and the channels or facilities of others shall be provided at the Customer's expense. (T)

A. The Company may, upon notification to the Customer, at a reasonable time, make (T) such tests and inspections as may be necessary to determine that the Customer is (T) complying with the Company's requirements for the installation, operation and maintenance of customer-provided equipment and for the wiring of the connection of customer equipment to Company-owned facilities.

B. If the protective requirements in connection with customer-provided equipment are not being complied with, the Company may take such action as necessary to protect its facilities and personnel and will promptly notify the Customer by (T) registered mail in writing of the need for protective action. In the event that the Customer fails to advise the Company within 10 days after such notice is received (T) or within the time specified in the notice that corrective action has been taken, the Company may take whatever additional action is deemed necessary, including the suspension of service, to protect its facilities and personnel from harm. Such denials of service will be made in compliance with O.A.C. 4901:1-5-17. The Company will, upon request 24 hours in advance, provide the Customer with a (T) statement of technical parameters that the Customer's equipment must meet. (T)

2.3.2. INSPECTION AND TESTING

A. Upon suitable notification to the Customer, and at a reasonable time, the Company (T) may make such tests and inspections as may be necessary, without penalty or (C) liability, to determine that the Customer is complying with the requirements set (C) forth in Section 2.3 for the installation, operation, and maintenance of customer-provided facilities, equipment, and wiring in the connection of customer-provided facilities and equipment to Company-owned facilities and equipment.

B. If the protective requirements for customer-provided equipment are not being complied with, the Company may take such action as it deems necessary to protect its facilities, equipment, and personnel. The Company will notify the Customer (T) promptly if there is any need for further corrective action. Within ten days of receiving this notice, the Customer must take this corrective action and notify the (T) Company of the action taken. If the Customer fails to do this, the Company may (T) take whatever additional action is deemed necessary, including the suspension of service, to protect its facilities, equipment and personnel from harm.

2. GENERAL REGULATIONS

2.4. ORDERING, RATING AND BILLING OF ACCESS SERVICES WHERE MORE THAN ONE EXCHANGE COMPANY IS INVOLVED

The Company accepts and adheres to the Ordering and Billing Forum guidelines, Multiple Exchange Carrier Access Billing (MECAB) and Multiple Exchange Carrier Ordering and Design (MECOD).

2.5. ALLOWANCE FOR INTERRUPTIONS IN SERVICE

2.5.1. GENERAL

A. A credit allowance will be given when service is interrupted, except as specified in 2.5.3, following. A service is interrupted when it becomes inoperative to the Customer; e.g., the Customer is unable to transmit or receive because of a failure (T)
of a component furnished by the Company under this Tariff. (T)

B. An interruption period begins when the Customer reports a service, facility or (T)
circuit to be inoperative and, if necessary, releases it for testing and repair. An interruption period ends when the service, facility, or circuit is operative.

C. If the Customer reports a service, facility, or circuit to be interrupted but declines (T)
to release it for testing and repair, the service, facility, or circuit is considered to be impaired but not interrupted. No credit allowances will be made for a service, facility, or circuit considered by the Company to be impaired.

2.5.2. NOTIFICATION OF SERVICE-AFFECTING ACTIVITIES

The Company will provide the Customer reasonable notification of service- (T)
affecting activities that may occur in normal operation of its business. Such activities may include, but are not limited to, equipment or facilities additions, removals or rearrangements and routine preventative maintenance. Generally, such activities are not specific to an individual Customer but affect many (T)
customers' services. No specific advance notification period is applicable to all service activities. The Company will work cooperatively with the Customer to (T)
determine the reasonable notification requirements. With some emergency or unplanned service-affecting conditions, such as an outage resulting from cable damage, notification to the Customer may not be possible. (T)

2. GENERAL REGULATIONS

2.5. ALLOWANCE FOR INTERRUPTIONS IN SERVICE (CONT'D)

2.5.3. LIMITATIONS ON ALLOWANCES

No credit allowance will be made for any interruption in service:

A. Due to the negligence of or noncompliance with the provisions of this Tariff by any person or entity other than the Company, including but not limited to the Customer or other common carriers connected to the service of the Company; (T)

B. Due to the failure of power, equipment, systems, connections or services not provided by the Company;

C. Due to circumstances or causes beyond the control of the Company;

D. During any period in which the Company is not given full and free access to its facilities and equipment for the purposes of investigating and correcting interruptions;

E. During any period in which the Customer continues to use the service on an impaired basis; (T)

F. During any period when the Customer has released service to the Company for maintenance purposes or for implementation of a Customer order for a change in service arrangements; (T) (T)

G. That occurs or continues due to the Customer's failure to authorize replacement of any element of special construction; and (T)

H. That was not reported to the Company within thirty (30) days of the date that service was affected.

2. GENERAL REGULATIONS

2.5. ALLOWANCE FOR INTERRUPTIONS IN SERVICE (CONT'D)

2.5.4. USE OF ANOTHER MEANS OF COMMUNICATIONS

If the Customer elects to use another means of communications during the period of interruption, the Customer must pay the charges for the alternative service used. (T) (T)

2.5.5. APPLICATION OF CREDITS FOR INTERRUPTIONS IN SERVICE

In case of an interruption to any service, allowance for the period of interruption, if not due to the negligence of the Customer, shall be as follows: (T)

A. For Switched Access Service, no credit shall be allowed for an interruption of less than 24 hours. The Customer shall be credited for an interruption of 24 hours or more at the rate of 1/30 of (a) any applicable monthly rates, or (b) the assumed minutes of use charge for each period of 24 hours or major fraction thereof that the interruption continues. (T)

B. The credit allowance(s) for an interruption or for a series of interruptions shall not exceed (a) any applicable monthly rates, or (b) the assumed minutes of use charge for the service interrupted in any one monthly billing period.

2. GENERAL REGULATIONS

2.6. PRIVACY RULES

Automatic Number Identification (ANI) derived information may be used only for billing, routing, screening, ensuring network performance, completing calls or performing, services directly related to the telephone caller's original call or transaction. Therefore, should the business that receives ANI information have an established customer relationship with the caller, the business may offer products or services to the caller that are directly related to the products or services previously purchased by the caller. The business that receives ANI information may not establish marketing lists or conduct ongoing market calls for unrelated products or services or sell the information derived from ANI (caller's name, address, telephone billing number, purchasing habits, etc.) to third parties unless it gets the prior written consent of the caller.

2. GENERAL REGULATIONS

2.7. APPLICATION OF RATES AND CHARGES

The regulations set forth in this section govern the application of rates for services contained in other sections of this Tariff.

2.7.1. MEASURING ACCESS MINUTES

Customer traffic will be measured in minutes of use by the Company at its End Office, Trunk Gateway, or functionally equivalent locations (e.g. media gateways, soft switches). Originating and terminating calls will be measured (i.e., recorded) by the Company to determine the basis for computing chargeable access minutes. Access minutes or fractions thereof are accumulated over the billing period and are then rounded up to the nearest access minute. (C) (C) (D) (D)

2. GENERAL REGULATIONS

2.7. APPLICATION OF RATES AND CHARGES (CONT'D)

2.7.2. RATES BASED UPON DISTANCE

Where the charges for service are specified based upon distance, the following rules apply:

A. Distance between two points is measured as airline distance. In the case of distance measurement for tandem transport, the two points are the access tandem and the Company's End Office, Trunk Gateway, or functionally equivalent location (e.g. media gateway, soft switch). Their measurement points are a set of geographic "V" (vertical) and "H" (horizontal) coordinates. (C) (C)

B. The airline distance between any two points is determined as follows: (T)

1. Obtain the "V" and "H" coordinates for each point.

2. Compute the difference between the "V" coordinates of the two points; and the difference between the two "H" coordinates. (T)

3. Square each difference obtained in step (2) above.

4. Add the square of the "V" difference and the square of the "H" difference obtained in step (3).

5. Divide the sum of the squares by 10. Round to the next higher whole number if any fraction is obtained.

6. Obtain the square root of the whole number result obtained above. Round to the next higher whole number if any fraction is obtained. This is the airline mileage.

This is the airline mileage.

Formula:

$$\sqrt{\frac{|v_1 v_2|^2 + |h_1 h_2|^2}{10}}$$

C. The airline mileage is used to determine the Switched Access Service Common Mileage rates as set forth in Section 3.

2. GENERAL REGULATIONS

2.7. APPLICATION OF RATES AND CHARGES (CONT'D)

2.7.3. NONRECURRING CHARGES

Nonrecurring charges are one-time charges that apply for a specific work activity (i.e., installation or service rearrangements).

A. Installation of Service

Nonrecurring charges apply to each Access Service installed. For Switched Services ordered on a per trunk basis, the charge is applied per trunk. For Switched Services ordered on a busy hour minutes of capacity basis, the charge is also applied on a per trunk basis but the charge applies only when the capacity ordered requires the installation of an additional trunk(s).

B. Service Rearrangements

All changes to existing services other than changes involving administrative activities only will be treated as a discontinuance of the existing service and an installation of a new service. The nonrecurring charge described in A., preceding, will apply for this work activity. Moves that change the physical location of the point of termination are described below.

1. Moves Within the Same Building

When the move is to a new location within the same building, the charge for the move will be an amount equal to one half of the nonrecurring charge for the capacity affected. There will be no change in the minimum period requirements.

2. Moves to a Different Building

Moves to a different building will be treated as a discontinuance and start of service and all associated nonrecurring charges will apply. New minimum period requirements will be established for the new service. The Customer will also remain responsible for satisfying all outstanding minimum period charges for the discontinued service. (T)

2. GENERAL REGULATIONS

2.8. ACCESS SERVICE ORDER

2.8.1. ORDERING REQUIREMENTS

As set forth in Section 2.1.3.B, orders for Switched Access service are considered placed by the Customer upon the routing of calls by the Customer to and from the Company. The Company does not charge for the initiation, cancellation, or modification of an access service request. (C) (C)

2. GENERAL REGULATIONS

2.8. ACCESS SERVICE ORDER (CONT'D)

(D)

(D)

2. GENERAL REGULATIONS

2.8. ACCESS SERVICE ORDER (CONT'D)

(D)

(D)

2. GENERAL REGULATIONS

2.8. ACCESS SERVICE ORDER (CONT'D)

(D)

(D)

2. GENERAL REGULATIONS

2.8. ACCESS SERVICE ORDER (CONT'D)

(D)

(D)

2. GENERAL REGULATIONS

2.8. ACCESS SERVICE ORDER (CONT'D)

(D)

(D)

2. GENERAL REGULATIONS

2.8. ACCESS SERVICE ORDER (CONT'D)

(D)

(D)

2. GENERAL REGULATIONS

2.8. ACCESS SERVICE ORDER (CONT'D)

(D)

(D)

2. GENERAL REGULATIONS

2.9. BILLING AND PAYMENT

The Company shall bill on a current basis all charges incurred by and credits due to the Customer. The Company shall bill in advance charges for all services provided during the ensuing billing period except for services billed on a per usage basis. (C) (C)

Billing shall be based on usage as determined by call detail. When call detail is unavailable, bills shall be based on estimated PIU as described in Section 2.2.3. (N) (N)

All bills for service provided to the Customer by the Company are due (payment date) within 30 calendar days of the bill date and are payable in immediately available funds. If such payment due date would cause payment to be due on a Saturday, Sunday or Legal Holiday, payment for such bills shall be due from the Customer as follows: (T) (C) (T)

If such payment due date falls on a Sunday or on a Legal Holiday, the payment due date shall be the first non-Holiday date following such Sunday or Legal Holiday. If such payment due date falls on a Saturday or on a Legal Holiday that is observed on Tuesday, Wednesday, Thursday or Friday, the payment due date shall be the last non-Holiday day preceding such Saturday or Legal Holiday.

When a Customer's check is not honored by the financial institution and the check is returned to the Company due to "Insufficient Funds" in the Customer's account, or for similar reasons, a charge of twenty-five dollars ($25.00) shall apply, unless the Customer can establish that the charge should not be assessed. (T) (T) (T)

A late payment charge of 1.5% per month will be applied to charges not paid by the due date. The late payment charge will not be applied to previous late payment charges that have been assessed but not yet been paid for, but will apply to the accumulated services for which the Customer is in arrears. Late payment charges will be applied without discrimination. (T) (T)

2. GENERAL REGULATIONS

2.9. BILLING AND PAYMENT (CONT'D)

2.9.1. TAXES

The Customer is responsible for the payment of all state, local and E911 taxes, surcharges, utility fees, or other similar fees for which the end user is directly responsible and that may be levied by a governing body or bodies in conjunction with or as a result of a service furnished under a tariff on file with the Public Utilities Commission of Ohio. These charges may appear as separate line items on the Customer's bill, as opposed to being included in the rates contained in a tariff. Any such line item charges will be reflected in the Company's tariff. The Company shall not assess separately any taxes, fees or surcharges, other than government-approved sales taxes imposed directly on the end users, without seeking Commission approval under the appropriate local competition procedures required by the Commission. The Company shall comply with Commission procedures by sending notice to all Customers informing them of the new line item charges. (T) (T) (T) (T) (T)

2.9.2. CLAIMS AND DISPUTES

In the event that a billing dispute occurs concerning any charge billed to the Customer by the Company, the Customer must submit a documented claim for the disputed amount. The Customer will submit all documentation as may reasonably be required to support the claim. All claims must be submitted to the Company within 120 days of receipt of billing for that service. If the Customer does not submit a claim as stated above, the Customer waives all rights to filing a claim thereafter. Upon notification of a dispute, the Company shall undertake an investigation of the disputed charges, per O.A.C. 4901:1-7. The Customer must pay all undisputed charges by the applicable due date. After filing a claim for disputed charges with the Company, the Customer may be required to place all disputed amounts into a U.S.-based, interest bearing escrow account with a third party escrow agent, with costs paid for by the disputing party. (T) (T) (T) (T) (N) (N)

All disputes between the Company and the Customer that cannot be settled through negotiation may be resolved by the Public Utilities Commission of Ohio. (T) (T)

2. GENERAL REGULATIONS

2.9. BILLING AND PAYMENT (CONT'D)

2.9.3. PAYMENT OF DEPOSITS

To safeguard its interests, the Company may require a Customer to make a deposit to be held as a guarantee for the payment of charges. A deposit does not relieve the Customer of the responsibility for the prompt payment of bills on presentation. The deposit will not exceed an amount equal to: (T) (T)

- two month's charges for a service or facility which has a minimum payment period of one month; or
- the charges that would apply for the minimum payment period for a service or facility which has a minimum payment period of more than one month; except that the deposit may include an additional amount in the event that a termination charge is applicable.

A deposit may be required in addition to an Advance Payment.

When a service or facility is discontinued, the amount of a deposit, if any, will be applied to the Customer's account and any credit balance remaining will be refunded. Before the service or facility is discontinued, the Company may, at its option, return the deposit or credit it to the Customer's account. If the amount of the deposit is insufficient to cover the balance due to the Customer's account, the Company retains the right to collect any amounts owing after the deposit has been applied plus any costs related to the collection of any remaining balance. (T) (T) (T)

Deposits held will accrue interest at a simple interest rate equal to the rate applicable for the late payment charge set forth in 2.9, preceding. Interest will not accrue on any deposit after the date on which reasonable effort has been made to return it to the Customer. (T)

Text on this page has been moved to Section 2, Page 34.

2. GENERAL REGULATIONS

2.9. BILLING AND PAYMENT (CONT'D)

2.9.4. ADVANCE PAYMENTS

To safeguard its interests, the Company may require a Customer to make an Advance Payment before services and facilities are furnished. The Advance Payment will not exceed an amount equal to the non-recurring charge(s) and one month's charges for the service or facility. In addition, where special construction is involved, the Advance Payment may also include an amount equal to the estimated non-recurring charges for the special construction and recurring charges (if any) for a period to be set between the Company and the Customer. The Advance Payment will be applied, as a credit, to the Customer's billed service charges. When there has been a decrease in the number of services originally ordered, only the portion of the Advance Payment for services actually installed will be credited. An Advance Payment may be required in addition to a deposit. (T) (T) (T) (C) (C)

2.10. SPECIAL CONSTRUCTION

A. Special construction charges may apply for services provided to the Customer by the Company. Special construction includes but is not limited to that construction undertaken: (C)

(1) where facilities are not presently available, and there is no other requirement for the facilities so constructed;
(2) of a type other than that which the Company would normally utilize in the furnishing of its services;
(3) over a route other than that which the Company would normally utilize in the furnishing of its services;
(4) in a quantity greater than that which the Company would normally construct;
(5) on an expedited basis;
(6) on a temporary basis until permanent facilities are available;
(7) involving abnormal costs;
(8) in advance of its normal construction; or
(9) when the Company furnishes a facility or service for which a rate or charge is not specified in the Company's tariff (C)

Text on this page has been moved from Section 2, Page 33.

2. GENERAL REGULATIONS

2.9. BILLING AND PAYMENT (CONT'D)

2.10. SPECIAL CONSTRUCTION (CONT'D)

B. Where the Company furnishes a facility or service requiring special construction, charges will be determined by the Company and may include: (1) non-recurring charges; (2) recurring charges; (3) usage charges; (4) termination liabilities; or (5) combination thereof. (C)

C. Rates and charges for special construction shall be determined and presented to the Customer for its approval prior to the start of construction. No construction will commence until and unless the Customer accepts in writing the rates and charges as presented by the Company.

D. Basis for Cost Computation

The costs referred to in this 2.10 may include one or more of the following items to the extent they are applicable:

1. Costs to install the facilities to be provided including estimated costs for the rearrangements of existing facilities. These costs include:
   a) Equipment and materials provided or used;
   b) Engineering, labor and supervision;
   c) Transportation; and
   d) Rights of way and/or any required easements.
2. Cost of maintenance;
3. Depreciation on the estimated cost installed of any facilities provided, based on the anticipated useful service life of the facilities with an appropriate allowance for the estimated net salvage;
4. Administrative expenses, taxes on the basis of reasonable average cost for these items;
5. License preparation, processing and related fees;
6. Any other identifiable costs related to the facilities provided; or
7. An amount for return and contingencies. (C)

2. GENERAL REGULATIONS

2.9. BILLING AND PAYMENT (CONT'D)

2.10. SPECIAL CONSTRUCTION (CONT'D)

D. Termination of Liability (C)

To the extent that there is no other requirement for use by the Company, a termination liability may apply for facilities specially constructed at the request of a customer.

1. The period on which the termination liability is based shall be the full term of the contract between the Company and the Customer.

2. The amount of the maximum termination liability is equal to the estimated amounts (including return) for:

   a. Costs to install the facilities to be provided including estimated costs for the rearrangements of existing facilities. These costs include:
      - Equipment and materials provided or used;
      - Engineering, labor and supervision;
      - Transportation; and
      - Rights of way and/or any required easements.
   b. License preparation, processing and related fees;
   c. Cost of removal and restoration, where appropriate; and
   d. Any other identifiable costs related to the specially constructed or rearranged facilities.

3. The termination liability method for calculation of the unpaid balance of a term obligation is obtained by multiplying the sum of the amounts determined as set forth above by a factor related to the unexpired period of liability and the discount rate for return and contingencies. The amount determined shall be adjusted to reflect the re-determined estimated net salvage, including any reuse of the facilities provided. This amount shall be adjusted to reflect applicable taxes. (C)

2.11. NON-ROUTINE INSTALLATION

At the Customer's request, installation and/or maintenance may be performed outside the Company's regular business hours or in hazardous locations. In such cases, charges based on cost of the actual labor, material, or other costs incurred by or charged to the Company will apply. If installation is started during regular business hours but at the Customer's request extends beyond regular business hours into time periods including, but not limited to, weekends, holidays, and/or night hours, additional charges may apply.

Text on this page has been moved from Section 2, Page 34.

3. SWITCHED ACCESS SERVICE

3.1. GENERAL

Switched Access Service provides a physical or logical transmission path for the routing, transport, origination and/or termination of Customer traffic between End Users and a third-party's access tandem by utilizing the services, facilities or equipment owned or controlled through contract or other means, by the Company. (C) (C)

This section of the Tariff does not preclude carriers from negotiating different rates, terms and conditions governing reciprocal compensation for toll VoIP-PSTN traffic. (N)

This Tariff does not supersede rates, term and conditions governing reciprocal compensation for toll VoIP-PSTN traffic in existing interconnection agreements.

Rates, terms and conditions governing reciprocal compensation for toll VoIP-PSTN traffic in this Tariff apply prospectively. (N)

3.2. TRAFFIC TYPE DESIGNATION (T)

The Company affirms that all of its Ohio traffic either originates from or terminates to a VoIP end user and is therefore, VoIP-PSTN. The Company shall keep its call records for at least 18 months and the Customer may audit such records at the Customer's expense. (N) (N)

(D)

(D)

3. SWITCHED ACCESS SERVICE

3.3. SWITCHED ACCESS RATE CATEGORIES

The rate categories that apply to Switched Access Service provided by the Company are as follows: (T) (T)

(D)

- Tandem Transport (T)
- Network Access (T)

The following diagram depicts a generic view of the components of Switched Access Service and the manner in which the components are combined to provide a complete access service.

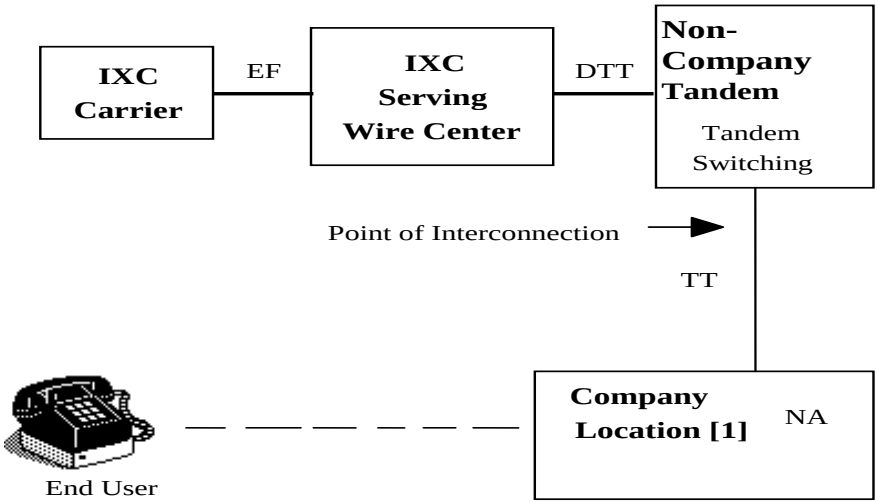

(T) (T) (T) (T) (T)

Company does not bill:
EF - Entrance Facility
DTT - Direct Trunk Transport
Tandem Switching

Company bills:
TT - Tandem Transport
NA - Network Access

(T) (T)

Switched Access rates are as set forth in Section 3.4, following.

[1] Company End Office, Trunk Gateway or functional equivalent (e.g. media gateway, soft switch). (T) (T)

3. SWITCHED ACCESS SERVICE

3.3. SWITCHED ACCESS RATE CATEGORIES (CONT'D)

3.3.1. [RESERVED FOR FUTURE USE] (T)

(D)

(D)

3. SWITCHED ACCESS SERVICE

3.3. SWITCHED ACCESS RATE CATEGORIES (CONT'D)

3.3.2. TANDEM TRANSPORT (T)

The Tandem Transport rate category provides for the transmission between a third-party access tandem and the Company's End Office, Trunk Gateway, or functionally equivalent location (e.g. media gateway, soft switch). Rate elements include: (C) (C)

(D) (D)

A. Transport Termination (T)

The Transport Termination element includes the non-distance sensitive portion of Tandem Transport and is assessed on a per-access-minute-of-use basis. (T)

B. Transport Mileage (T)

The Transport Mileage element includes the distance sensitive portion of Tandem Transport and is assessed on a per-access-minute-of-use-per-mile basis. Transport Mileage will be calculated based on the airline mileage between a third-party access tandem and the Company's End Office, Trunk Gateway, or functionally equivalent location (e.g. media gateway, soft switch) within the applicable LATA. (T) (N) (N)

3. SWITCHED ACCESS SERVICE

3.3. SWITCHED ACCESS RATE CATEGORIES (CONT'D)

3.3.2. TANDEM TRANSPORT (CONT'D) (T)

(D)

(D)

3. SWITCHED ACCESS SERVICE

3.3. SWITCHED ACCESS RATE CATEGORIES (CONT'D)

3.3.3. NETWORK ACCESS (T)

Network Access provides the functional equivalent of traditional end office switching. It consists of the following elements: Network Switching and Common Trunk Port. (C) (C)

A. Network Switching (T)

Network Switching provides for (a) the establishment of a call path for the routing of Customer communications from the Company's End Office, Trunk Gateway, or functionally equivalent location to a Company End User and (b) the establishment of a call path for the routing of communications originating from a Company End User for delivery to the Company's End Office, Trunk Gateway, or functionally equivalent location (e.g. media gateways, soft switches). (C)

The "establishment" of call path and routing is achieved through equipment and facilities, including, in some cases, a soft switch or similar equipment, owned or controlled through contract or other means, by the Company, which allows for the routing of voice communications between the Company's Trunk Gateway Location and End Users via SS7 signaling based on telephone numbers obtained by the Company and assigned to End Users as set forth in the LERG. (C)

B. Common Trunk Port

Common Trunk Port provides for the termination of tandem transport trunks in shared ports at the Company's End Office, Trunk Gateway, or functionally equivalent location (e.g. media gateways, soft switches). The Common Trunk Port rate is assessed on a per-MOU basis to all trunkside originating and terminating access minutes routed to the Company via a third party access tandem. (C) (C)

(D)

(D)

3. SWITCHED ACCESS SERVICE

3.3. SWITCHED ACCESS RATE CATEGORIES (CONT'D)

3.3.4. 8XX TOLL-FREE ACCESS SERVICE

All appropriate Switched Access rate elements (Tandem Transport, Network Access) apply to 8XX Toll-Free Access Service. (N) (N)

8XX Toll-Free Access Service is an originating access service offering. The service provides for the forwarding of end user dialed 8XX calls to a Company Service Switching Point, which will initiate a query to the database for the customer identification and delivery of the call. The call is forwarded to the appropriate customer based on the dialed 8XX number. Records exchange, rating and billing for Toll Free Data Base Access Service is subject to the provisions of the Multiple Exchange Carrier Access Billing Guidelines (MECAB). (T) (C)

A. Customer Identification Charge

The 8XX Toll-Free Access Service Customer Identification Charge applies for the identification of and delivery of 8XX calls to the appropriate customer. The charge is assessed to the Customer on a per query basis and may include an area of service which may range from a single NPA-NXX to an area consisting of all LATAs and NPAs within the state. The 8XX Customer Identification Charge is set forth in Section 3.4.5. (T) (T)

3. SWITCHED ACCESS SERVICE

3.4. SWITCHED ACCESS RATES AND CHARGES

3.4.1 SERVICE IMPLEMENTATION

	NONRECURRING CHARGE
A. Installation Charge, Per Location, Per Order	
1. First Trunk	$0.00
2. Each Subsequent Trunk	0.00

3.4.2 [RESERVED FOR FUTURE USE]

3.4.3 TANDEM TRANSPORT

	RECURRING RATE PER MOU	
A. Transport Termination	[1]	(C)
B. Transport Mileage, per mile	[1]	(C)

[1] Switched access rates are billed at the Company's tariffed interstate rates as found in Comcast Phone, LLC Tariff FCC No. 1 which may be viewed at www.comcast.com/tariffs. (N)

3. SWITCHED ACCESS SERVICE

3.4. SWITCHED ACCESS RATES AND CHARGES (CONT'D)

3.4.3. TANDEM TRANSPORT (CONT'D) (T)

(D)

(D)

3. SWITCHED ACCESS SERVICE

3.4. SWITCHED ACCESS RATES AND CHARGES (CONT'D)

3.4.4. NETWORK ACCESS

A. Network Switching	RECURRING RATE PER MOU	
1. Originating Access	[1]	(C)
2. Terminating Access	[1]	(C)
3 Common Trunk Port	[1]	(C)

3.4.5. 8XX TOLL-FREE ACCESS

	RECURRING RATE PER QUERY	
A. Customer Identification Charge	[1]	(C)

[1] Switched access rates are billed at the Company's tariffed interstate rates as found in Comcast Phone, LLC Tariff FCC No. 1 which may be viewed at www.comcast.com/tariffs. (N) | (N)

4. SPECIAL ACCESS SERVICE (T)

4.1. GENERAL (N)

Special Access Services are not generally available but may be provided subject to the terms, conditions, and limitations as set forth in Section 5.3, following, for Special Assemblies and Individual Case Basis Arrangements. (N)

5. MISCELLANEOUS SERVICES

5.1. PRESUBSCRIPTION

The Company will provide 1+ presubscription or 10XXX equal access consistent with the equal access rules of the Commission and of the Federal Communications Commission to enable end users to access an interexchange carrier (IC) for intrastate toll calling.

Presubscription is an arrangement whereby an end user may select and designate to the Company an Interexchange Carrier (IC) to access interexchange calls without the use of an access code. This IC is referred to as the end user's Primary Interexchange Carrier (PIC). The end user may select as its PIC any IC that orders originating FGD Switched Access Service at the end office that serves the end user.

New end users who are served by end offices equipped with FGD will be asked to presubscribe to an IC at the time they place an order with the Company for Exchange Access Service. They may select either of the following options. There will be no charge for this initial selection:

- Designate an IC as a PIC and dial 10XXX to reach other ICs.
- Designate that they do not want to be presubscribed to any IC and choose to dial 10XXX for all calls to all ICs.

After the end user's initial selection of a predesignated IC, a nonrecurring charge, as set forth in Section 5.4, will apply for any additional change in selection.

When an end user switches both their intraLATA and interLATA carrier at the same time, and when the end user selects the same carrier for both interLATA and intraLATA service, the Company will waive the intraLATA presubscription charge.

For 30 calendar days following the initiation of new service, an end user's initial request for either intraLATA or interLATA interexchange service will be provided free of charge. If an end user is unable to make a selection at the time of initiation of local service, the Company will read a random listing of all available toll providers to aid in the selection. If a selection is still not possible, the Company will inform the end user that the end user has 30 calendar days in which to inform the Company of a toll carrier selection. Until the end user informs the Company of a choice for a toll provider(s), the end user will not have a toll carrier but rather will be required to dial a carrier access code to route a toll call to the carrier of the end user's choice or make other arrangements. After 30 calendar days, the new end user's intraLATA or interLATA interexchange service selection will be subject to the presubscription rates set forth in Section 5.4.

5. MISCELLANEOUS SERVICES

5.2. SERVICE CHANGE DISPUTE (T)

If an End User disputes a change in service, the Company will investigate the origin of the change. If the change was due to a Company error, the original service will be restored free of charge. If the change was submitted by a Customer or a third party and either the Customer or the third party is unable to produce evidence of the End User's consent then the responsible Customer or third party will be responsible for all charges and penalties associated with the unauthorized change. (C) (C)

5.3. SPECIAL ASSEMBLIES AND INDIVIDUAL CASE BASIS ARRANGEMENTS

Arrangements will be developed on an Individual Case Basis (ICB) in response to a bona fide request from a Customer or prospective customer to develop a bid for any switched or special access service that the Company is technically capable of providing but which is not offered under this Tariff (special assembly), or to develop a competitive bid for a service that the Company offers under this Tariff (ICB). Rates quoted in response to such competitive requests may be different than those specified for such services in this Tariff. ICB and special assembly rates will be offered to the Customer in writing and on a nondiscriminatory basis. Customers served on a non-tariffed basis for services offered under this Tariff as of the effective date hereof shall be entitled to continue their existing serving arrangements under the same terms and conditions as "special assemblies," but those terms and conditions will not necessarily be available to new Customers when the same service is available under this Tariff. In addition, the Company may from time to time offer promotional or other special discounts to Customers who initiate service within the time contemplated by the promotional or other special discount offer. (T) (T) (T) (T)

5. MISCELLANEOUS SERVICES

5.4. RATES AND CHARGES

	NONRECURRING CHARGE
A. Presubscription Change Charge	
1. Per telephone exchange service, first line or trunk	[1]
2. Per telephone exchange service each additional line or trunk, concurrent with first line	[1]

(D)
(D)

[1] The PIC Change Charge may be found in the Company's FCC Tariff No. 1. (C)